Dokumentation K6 Bt *2* – *englisch*

INTERN - DIESE SEITE NICHT DRUCKEN ODER IM PDF VERÖFFENTLICHEN

Checkliste bei Änderungen

- Datum auf erste Seite von Doku eintragen!
- Änderungen gegenlesen!
- PDF ohne diese Seite erstellen

Nach Freigabe: Upload auf K6-Team Server

Änderungshistorie

Vers.	Datum	Autor	Änderungsgrund	Änderungen (Kapitel und Beschreibung)	HW	FW	Freigabe
1.0E	27.12.11	Falk	Neue Hardware und Firmware	Englische Übersetzung von V1.0 der deutschen Ausgabe	8.1.0	2.1	
1.1E	28.12.11	Miri	Korrektur	Korrektur der englischen Übersetzung	8.1.0	2.1	Falk 28.12.11

K6-Team

Bluetooth-Adapter

K6 Bt 2

Duplex Bluetooth Serial Adapter
for multiple baud rates

(HW 8.1.0, FW 2.2)

2016-03-07

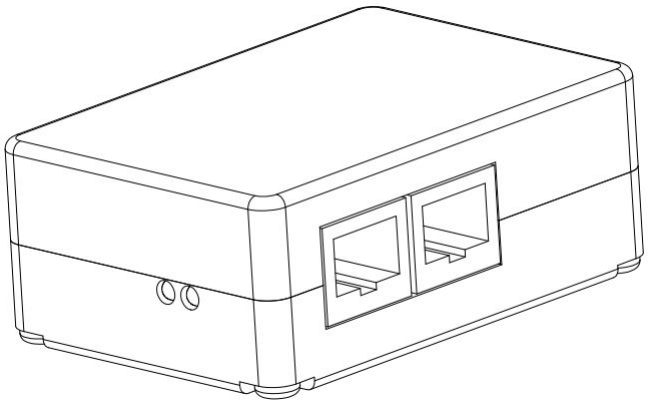

The K6 Bt provides a connection between a device with a serial RS232 port (GPS device, e.g. flight recorder, flarm, variometer) and a bluetooth enabled device (e.g. PDA, Smartphone, Tablet or PC).

It is possible to send data in both directions using several baud rates. The baud rate can be configured automatically, manually by jumpers or with a compatible software. To prevent unauthorized access, the connection is password protected.

1 Express manual for initial operation

Requirement for a fast initiation is a configuration as delivered:

- power supply on both connectors (see chapter 2.1)
- automatic baud rate identification (see chapter 3)
- bluetooth password known (pre-set identification and is printed on the label on the K6 Bt's housing)

Connecting K6 Bt in 5 steps

1. Connect the GPS device using a 1:1 patch cable with the K6 Bt (see image 1)
    - details see chapter 2.1

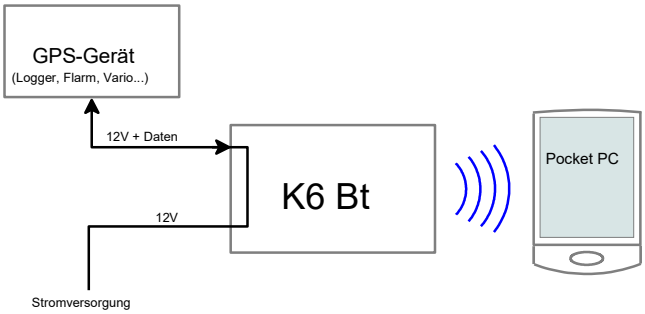

image 1: connection of K6 Bt with GPS device and power supply

2. Connect the K6 Bt to the existing cable of the planes power supply
    - the GPS device is supplied via the patch cable
3. The baud rate will be identified automatically
    - the GPS device has to be switched on!
    - the red LED begins with blinking and glows out after a few seconds (details see chapter 2.2)
4. Connect the bluetooth device (PDA, smartphone, Tablet or PC) over bluetooth with the K6 Bt
    - activate bluetooth and search for new bluetooth devices (detailed action depends on device and operation system). The bluetooth ID of K6 Bt begins with „K6BT“. The pre-set identification and is printed on the label on the K6 Bt's housing. Establish a connection and enter the password.
    - After connecting a new serial port (COM port) is available. The COM port number may differ from computer to computer.
5. Start the program which should receive data from the K6 Bt and choose the serial port assigned to the bluetooth connection in the settings dialogue.

finished!

2 General description

2.1 Housing and connection ports

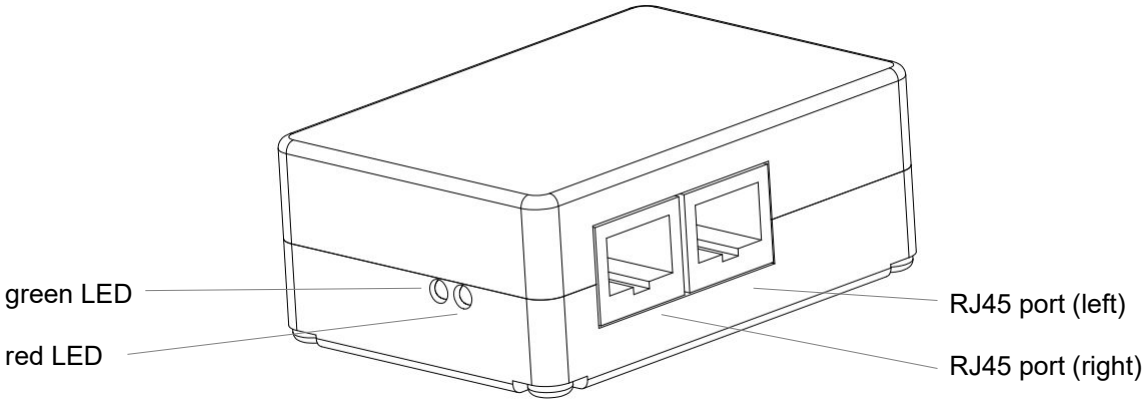

image 2: K6 Bt 2 with connection ports and status LED

The two-part housing of K6 Bt is mounted with 4 screws.

The K6 Bt sends and receives data and gets its power supply on both connection ports. Both ports are internally connected in parallel.

The pinout of the connectors is IGC conform (configuration see image 3). Thus devices with IGC configuration can be directly connected with an 1:1 patch cable.

A fuse with 0.5 up to 2 A has to be used for current limiting. In most cases the fuse can be used together for the connected GPS device and the K6 Bt.

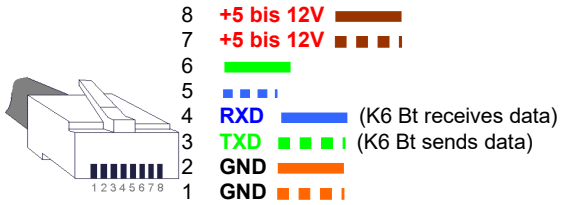

image 3: Pinout of the RJ45 connectors (IGC conform)

Notice: the enumeration of the pins, published by the IGC, is mirrored.

2.2 LEDs

Both LEDs give information about the operating condition of the K6 Bt:

- permanent light after turning on: ready for configuration, changes after 4 seconds
- red LED blinks (- -): automatic baud rate identification is enabled and baud rate is not found yet
- red LED out: baud rate found or constant setting
- green LED blinks (- -): no bluetooth-connection established yet
- green LED flashes (· ·)): bluetooth-connection established

2.3 Jumpers

Remove the screws and open the housing to get access to the circuit board. The circuit board itself can remain in the housing during configuration. See image 4 for a drawing of the circuit board with its jumpers:

jumper	function (delivery condition in bold)	
	bridged	**unbridged**
power supply	**Power supply over chosen connection port**	No power supply over chosen connection port (at least one jumper has to be setted!)
tx-data	**Data transmission from the Bluetooth device to the GPS device possible**	No data transmission from the Bluetooth device to the GPS device possible
baud rate	see chapter 3	

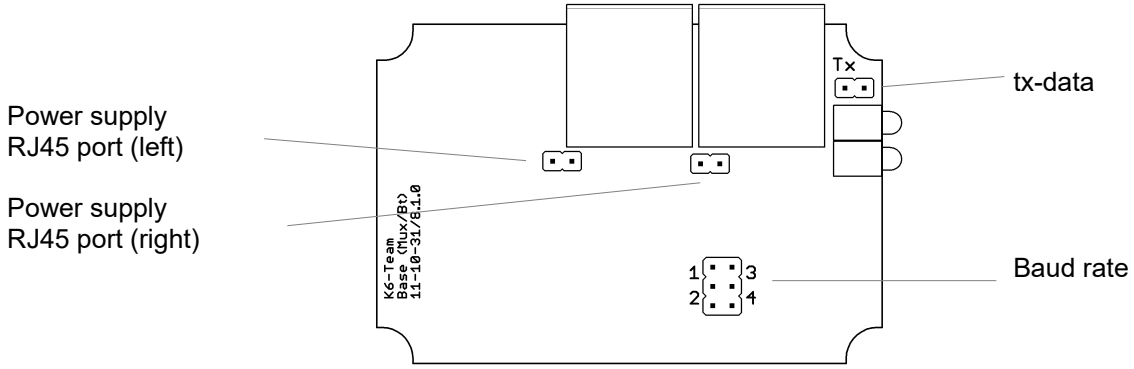

image 4: K6 Bt 2 PCB with jumpers

3 Configuration

3.1 Baud rate

Following baud rates are supported: 2400 baud, 4800 baud, 9600 baud, 19200 baud, 38400 baud, 57600 baud, 115200 baud. The baud rate of the K6 Bt has to match the baud rate of the connected GPS device. The baud rate of the K6 Bt can be configured in the following way:

3.1.1 Automatic baud rate identification

If no jumper is setted, the K6 Bt tries automatically to detect the baud rate of the connected device. Detection of the baud rate is only possible when the connected device sends NMEA-0183 conforming data with at least one sentence per second. After the power-on the K6 Bt searches for the correct baud rate indicated by double blinking of the red LED. If the correct baud rate is found, the LED stays off. The set baud rate is maintained until the K6 Bt is switched off.

After an interruption of the data transmission, a new baud rate is searched after the selected time when **reautobaud** is enabled. Thus different data sources can be operated alternately.

3.1.2 Constant baud rate

The baud rate can be fixed by setting jumpers (see image 4). Using a constant baud rate, the red LED remains off. The following table shows the configuration variants. Common baud rates can be realized with a single jumper or a switch. This way the baud rate can be switched in a fast way.

To change the baud rate configuration the K6 bt has to be switched off.

baud rate	auto	2400	4800	9600	19200	38400	57600	115200
configuration								

3.1.3 Setting of the baud rate via bluetooth

To download flights from flight recorder it is possible to set the baud rate of the K6 Bt using a proprietary K6-Team protocol via bluetooth. The software on the bluetooth device has to support the proprietary K6-Team protocol.

At the delivery the K6-Team protocol is enabled, for changing see chapter 3.2.

3.2 Additional configuration via terminal program

The settings for bluetooth ID, -password and the K6-Team protocol can be changed with a PC.

Therefore the jumper TX has to be setted and one of both connection ports has to be connected to the serial port of the PC. A **crossed** cable (TX and RX exchanged) is required (can be ordered at K6-Team).

On the PC a terminal program has to be installed (e.g. the program provided by MS Windows Hyperterminal or any other terminal program).

Use the following configuration for the terminal program to connect with the K6 Bt:

baud rate: 115200 baud, data bits: 8, parity: none, stop bits: 1, flow control: none

After applying the power supply to the K6 Bt, the string 'ikkk' (+ one second pause) has to be entered in the terminal program within 4 seconds (while the red LED is continuously on).

The K6 Bt shows its main menu:

```
K6-Team K6 Bt HW 8.1.0, FW 2.2 build 2016-03-07
  - Main -
+----------------------------------------+
|  Main Setup                            |
+---------------------+------------------+
| I: Bluetooth ID     | K6-Team22        |
| P: Bluetooth PIN    | 4321             |
+---------------------+------------------+
|    Baudrate (Info)  | Auto (NMEA)      |
| R: Reautobaud       | 5 sec            |
| K: K6-Team protocol | enabled          |
+=====================+==================+
| S: Exit setup, start Bt                |
+----------------------------------------+
```

To change the configuration press the corresponding hot key:

Hot key	Function	Description
I	Bluetooth ID	Change bluetooth ID (0..9, a..z, A..Z, -)
P	Bluetooth PIN	Change password. Allowed are 1 to 8 digits (0..9) The password must contain at least one digit..
R	Reautobaud	Enable new search the baud rate by selecting the wait time
K	K6-Team protocol	Enable K6-Team protocol to control the baud rate over bluetooth. Compatible software is required. Enabled in delivery condition.

4 Bluetooth connection

The K6 Bt has to be connected to the GPS device and to the voltage supply first. Afterwards bluetooth has to be activated at the Pocket PC and a search for bluetooth devices can be started. After a few moments the Bluetooth device finds the K6 Bt.

The identification of the K6 Bt always begins with „K6BT“. The pre-set identification and is printed on the label on the K6 Bt's housing. Establish a connection and enter the password.

On most bluetooth devices these steps have to be taken only once and for the future the device automatically connects to the K6 Bt.

After connecting a new serial port (COM port) at the bluetooth device is available. The COM port number may differ from device to device. Consult the manual of your bluetooth device.

Start the program which should receive data from the K6 Bt and choose the serial port assigned to the bluetooth connection in the settings dialogue.

5 Specification

dimensions	ca. 72x50x28mm³
connection ports	2x RJ45 connection ports with IGC-compliant pinout
Power supply	5 to 15V by one of the connection ports • configurable with jumpers • reverse voltage protection (not for connected devices!) • fuse 0.5 up to 2A
Current drain	ca. 60mA
baud rates	2400, 4800, 9600, 19200, 38400, 57600, 115200 baud automatic baud rate identification for NMEA0183-compliant datasets baud rate changeable via bluetooth (see separate documentation for software developers)
Bluetooth-Spezifikation	Bluetooth v2.0+EDR, 2,4GHz, range: up to 20m encrypted data communication over serial port profile (SPP)

6 Support

Warning:
K6 Bt may loose NMEA data sets. Never rely entirely on the indication of your end device. Airspace observation is essential!

K6-Team
Ihn. Ingrid Rüth

B.-v.-Linsenmann-Str. 7
72108 Rottenburg
Germany

http://www.k6-team.de
E-Mail: service@k6-team.de

Please don't put old devices into the garbage, return it to us.
After the EU FAQ list the devices which are intended specially to the application in means of transportation are excluded from the range of application of the RoHS directive and with it from § 5 ElektroG.
Of course the K6 Bt is soldered lead-free.